DWG.NO. EZZ902075-1/1

Third Angle Projection
Dimensions in mm

Model No.	Max Appli. Motor (kW) Normal Duty	Heavy Duty	Terminal Symbol INPUT	OUTPUT(MOTOR)	Cooling Fan	Mass (kg)
CIMR-LT2□0346A	-	90	R/L1 S/L2 T/L3	U/T1 V/T2 W/T3	3	98
CIMR-LT2□0415A	-	110	R/L1 S/L2 T/L3	U/T1 V/T2 W/T3	3	99
CIMR-LB4□0260A	-	132	R/L1 S/L2 T/L3	U/T1 V/T2 W/T3	3	102
CIMR-LB4□0304A	-	160	R/L1 S/L2 T/L3	U/T1 V/T2 W/T3	3	107
CIMR-LU2□0346A	-	90	R/L1 S/L2 T/L3	U/T1 V/T2 W/T3	3	98
CIMR-LU2□0415A	-	110	R/L1 S/L2 T/L3	U/T1 V/T2 W/T3	3	99
CIMR-LU4□0260A	-	132	R/L1 S/L2 T/L3	U/T1 V/T2 W/T3	3	102
CIMR-LU4□0304A	-	160	R/L1 S/L2 T/L3	U/T1 V/T2 W/T3	3	107
CIMR-LU5□0172A	-	110	R/L1 S/L2 T/L3	U/T1 V/T2 W/T3	3	107
CIMR-LU5□0200A	-	160	R/L1 S/L2 T/L3	U/T1 V/T2 W/T3	3	107

□:A to Z

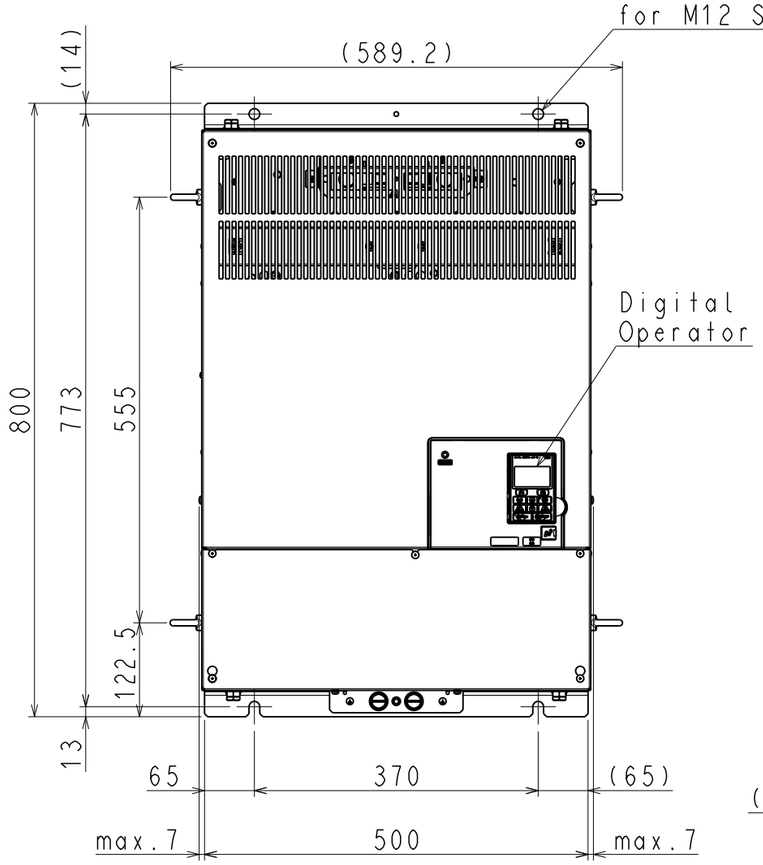

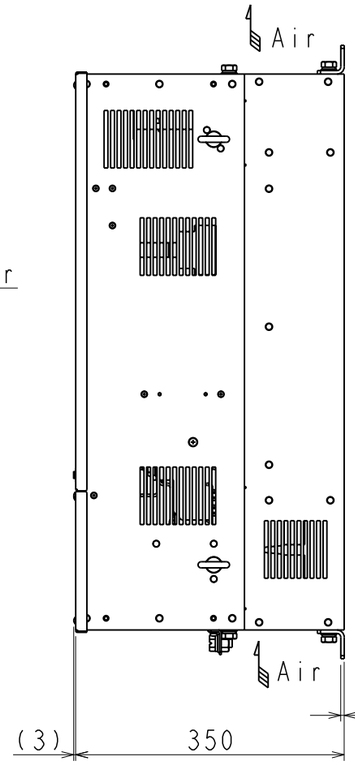

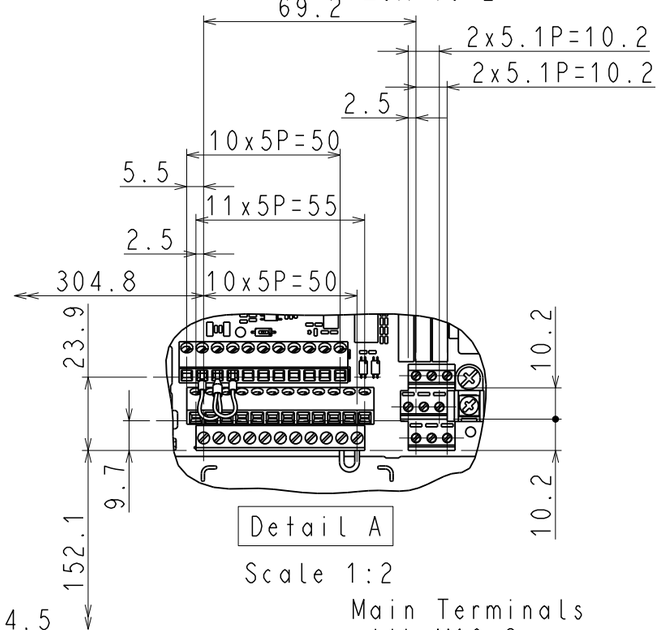

Detail A

Scale 1:2

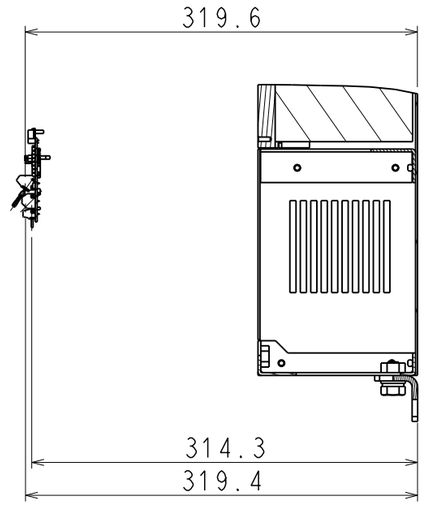

Section B-B

Scale 1:5

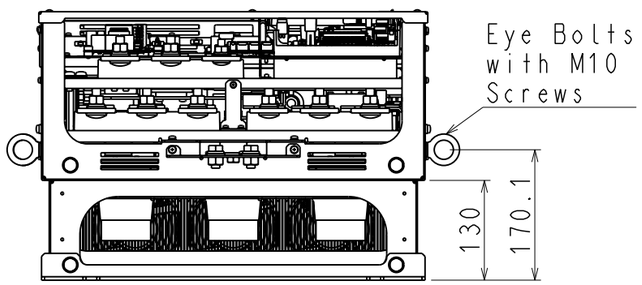

Scale 1:8

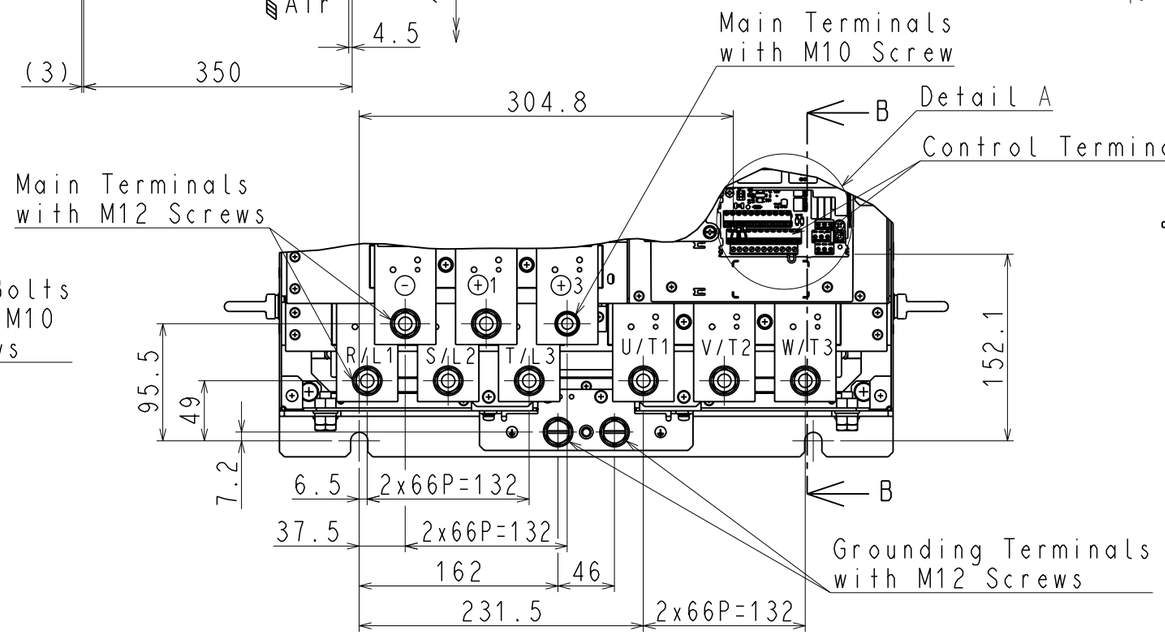

Detail(without Front cover) Scale 1:5

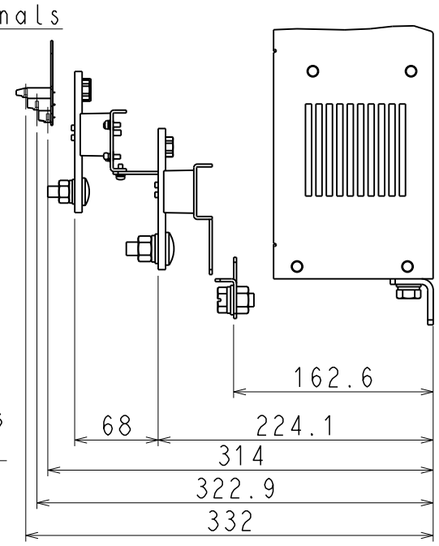

REVISIONS	SCALE - : -	YASKAWA	DRAW.	Nov.28,2013	N.Takeyama	TITLE L1000A OPEN CHASSIS TYPE	DWG.NO. EZZ902075 1/1	REV.
			CHECK		M.Kojyo	DIMENSION DIAGRAM		
			APPR.		M.Kojyo			